REVISIONS			
SYM	DESCRIPTION	C/N NO.	BY-DATE
A	RELEASED	CN20500	TH-1/8/08

APPROVAL

BY _____ DATE _____

- ☐ APPROVED, PROCEED WITH FABRICATION
- ☐ APPROVED AS NOTED, PROCEED WITH FABRICATION IN ACCORDANCE WITH COMMENTS
- ☐ DISAPPROVED, DO NOT FABRICATE

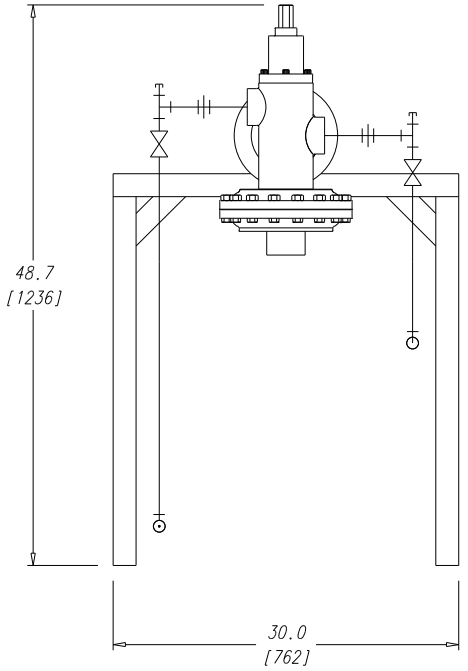

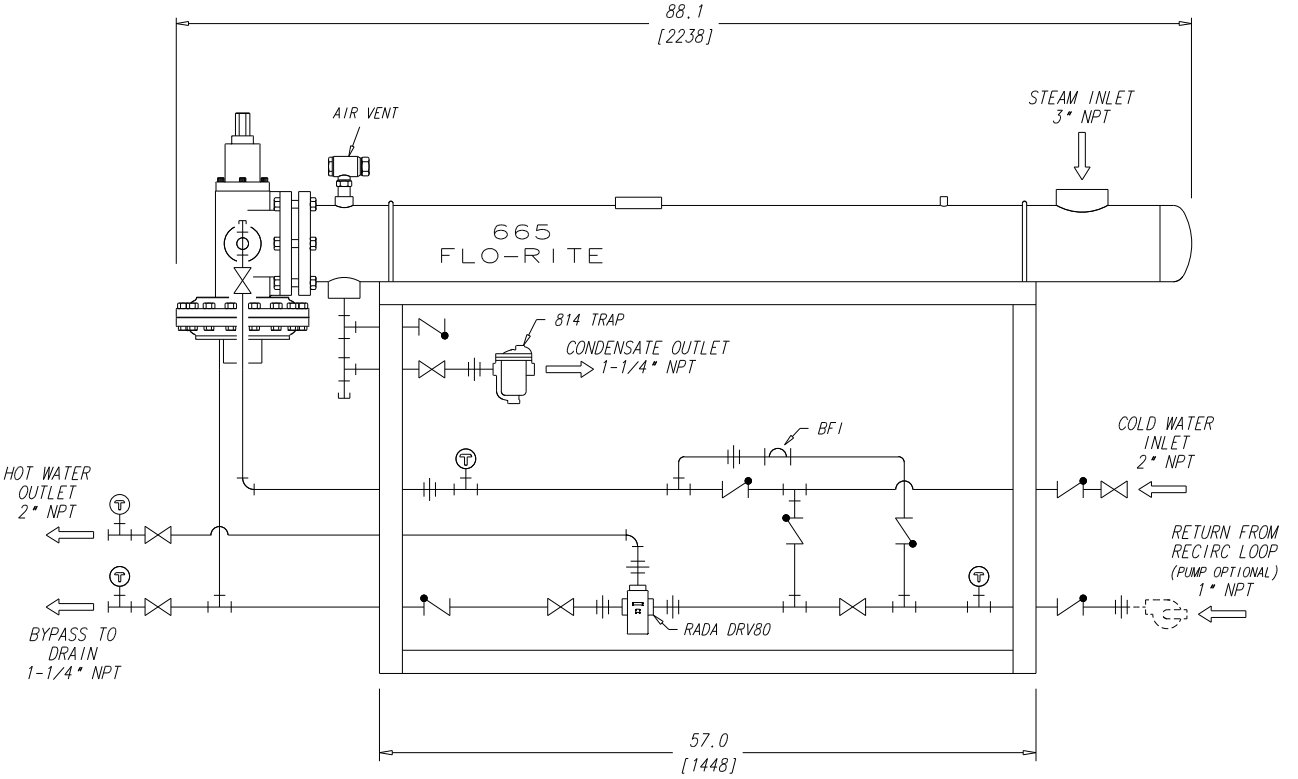

THIS IS A CONCEPTUAL SCHEMATIC DRAWING. THE ACTUAL DETAIL OF IT'S CONTENTS MAY NOT BE AS APPEARS.

GRAPHICS ARE USA BASED
DRAWING HAS USA VIEW PROJECTION

ENGLISH
DO NOT SCALE DRAWING
TOLERANCE UNLESS OTHERWISE SPECIFIED
FRAC. ±1/64
IN. MM
DEC. .XXXX = ±.0005 ±.010
.XXX = ±.005 ±.10
.XX = ±.015 ±.5
.X = ±.030 ±1
ANGLES ±2°

ARMSTRONG INTERNATIONAL, INC.

Copyright © 2007 Armstrong International, Inc.

FLO-RITE-TEMP WATER HEATER
665 P-PTWDMC1 SALES SCHEMATIC

MATERIAL
DR'N BY Hooley
CH'KD BY ALISON
SCALE
DATE 1/8/08
SHEET NO. SHEET 1
DRAWING NO. S5478