SH Series Superheat Traps

Bimetallic Steam Traps For Superheat Conditions

For Pressures to 1,800 psig (124 bar)...Cold Water Capacities to 6,500 lb/hr (2,950 kg/hr)

Description

Armstrong's SH Series Bimetallic Steam Traps for superheat or low load conditions are the ideal traps for applications where other trap styles are not suitable for long life.

The Armstrong SH Series bimetallic traps also have the ability to handle the large start-up loads associated with superheat applications. The unique bimetallic element allows for shut-off before superheat reaches the trap, thus preventing steam loss. The SH 900/1500 series utilizes titanium valves and seats to ensure extremely long service life in the harsh environment of superheated steam systems.

Maximum Operating Conditions

Maximum allowable pressure (vessel design):

Model SH-300:	580 psig @ 662°F (40 bar @ 350°C)
Model SH-900L and H:	900 psig @ 900°F (62 bar @ 482°C)
Model SH-1500:	1,800 psig @ 1,050°F (124 bar @ 565°C)

Maximum operating pressure:

Model SH-300:	319 psig (22 bar)
Model SH-900L:	650 psig (45 bar)
Model SH-900H:	900 psig (62 bar)
Model SH-1500:	1,800 psig (124 bar)

Suggested minimum operating pressure:

Model SH-300:	Not applicable
Model SH-900L and H:	200 psig (14 bar)
Model SH-1500:	600 psig (41 bar)

Connections

Model SH-300:	Screwed BSPT and NPT, socketweld, flanged DIN or ANSI (welded)
Model SH-900:	Socketweld, flanged, buttweld, screwed, NPT, BSPT
Model SH-1500:	Socketweld, flanged, buttweld

Materials

Model SH-300

Body and cap:	ASTM A105 ASTM A350-LF2
Valve and seat:	Chrome Steel - 440C
Elements:	Nickel plated
Strainer:	Stainless steel screen - 303, Boronized

Model SH-900

Body and cap:	ASTM A351 Gr. CF8M
Valve and seat:	Titanium
Elements:	Ni-Cr and stainless steel
Strainer:	Stainless steel screen

Model SH-1500

Body and cap:	ASTM 217 Gr. C12A
Valve and seat:	Titanium
Elements:	Ni-Cr and stainless steel
Strainer:	Stainless steel screen

Specification

Steam trap shall be a bimetallic style. The trap shall be investment cast chrome-moly steel (Model SH 1500) with integral stainless steel strainer, in-line repairable. The mechanism shall consist of a stacked nickel-chrome bimetal operator, with titanium valve and seat. The steam trap shall be capable of operation on low load and superheat applications throughout its pressure/temperature range.

Bimetallic style steam traps in carbon steel (Model SH-300) or stainless steel (Model SH 900) with integral stainless steel strainer, in-line repairable. The mechanism shall consist of a stacked nickel-chrome bimetal operator (SH 300 nickel plated) with titanium valve and seat (SH 300 chrome steel valve and seat). The steam trap shall be capable of operation on low-load applications throughout its pressure/temperature range.

How to Order

- Specify model number
- Specify maximum operating pressure
- Specify size and type of pipe connection. When flanges are required, specify type of flange in detail

Designs, materials, weights and performance ratings are approximate and subject to change without notice. Visit www.armstronginternational.com for up-to-date information.

North America • Latin America • India • Europe / Middle East / Africa • China • Pacific Rim
armstronginternational.com

SH Series Superheat Traps

Bimetallic Steam Traps For Superheat Conditions

For Pressures to 1,800 psig (124 bar)...Cold Water Capacities to 6,500 lb/hr (2,950 kg/hr)

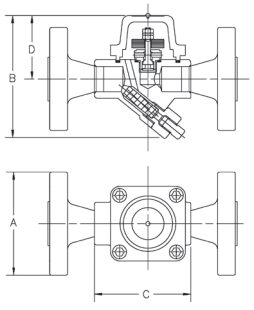

Model SH-300

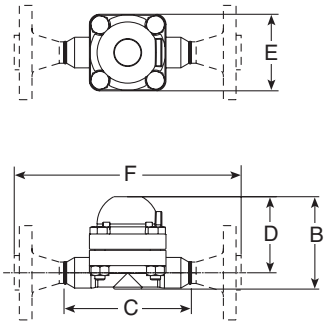

Model SH-900

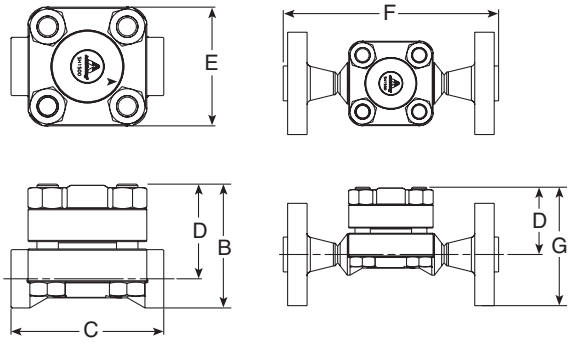

Model SH-1500

SH Series Dimensions and Weights

Model	SH-300		SH-900		SH-1500	
Pipe Connections	in	mm	in	mm	in	mm
	1/2, 3/4, 1	15, 20, 25	1/2, 3/4, 1**	15, 20, 25	3/4, 1	20, 25
"B" Height	4-1/2	115	4-1/2	115	5	127
"C" Face-to-Face	3-1/2	90	6-1/4	158	6-1/4	158
"D" ℄ to Top	2-5/16	59	3-3/4	95	3-13/16	97
"E" Width	—	—	3-3/4	95	4-7/8	124
*"F"	—	—	11	279	12	305
* "G"	—	—	—	—	6-3/8	162
Weight, lb (kg)	4.1 (1.9)		10 (4.4)		15 (6.8)	

"F" dimensions for SH-900 are for 3/4" connection, class 600 flanged. "F" and "G" dimensions for SH-1500 are for 3/4" connection, class 1500 flanged. Consult factory for dimensions of models with other connection sizes and/or flanges.

** SH-900 1" buttweld.

SH-300/SH-900 Pressure/Temperature

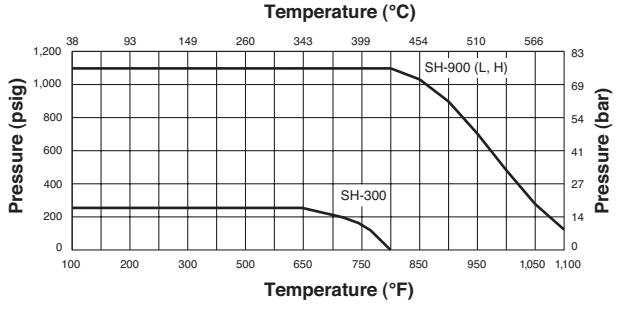

SH-1500 Pressure/Temperature

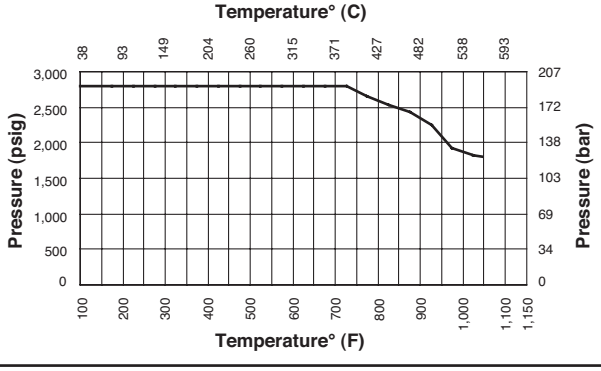

SH-300/SH-900 Cold Water Capacity

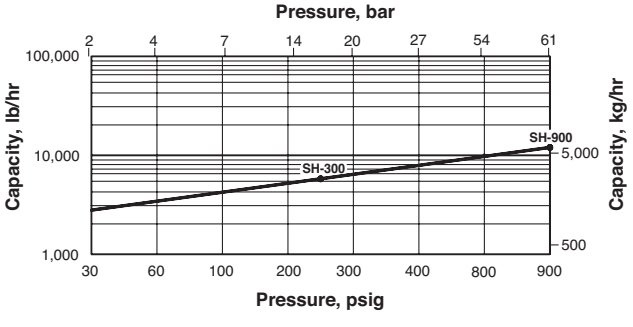

SH-1500 Cold Water Capacity

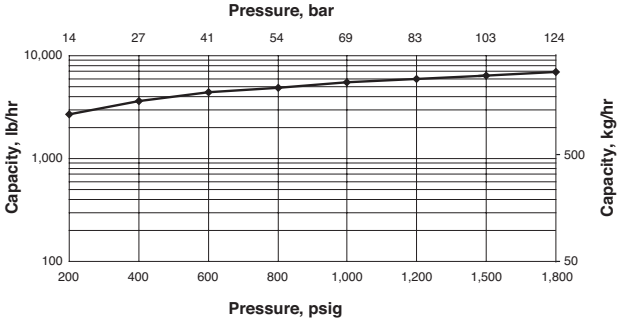

Designs, materials, weights and performance ratings are approximate and subject to change without notice. Visit www.armstronginternational.com for up-to-date information.